Ver 2.2 Jul/29/2003

LVB FSK Receiver - R87

Features

Highly integrated
High Sensitivity
Easy Connection with Antenna

Typical Applications

Cordless Mouse and Keyboard
Two-in-one FSK Receiver
Wireless Game Pad
27 MHz Wireless Data Transmitters

Product Description

The R87 is a super IC served as a low VHF band (LVB) FSK receiver. The device is a low profile SMD package and can be easily layout in a low cost single-side PCB. This super IC is used in FSK applications of 27 MHz band worldwide. The sensitivity of the receiver can be better than –90dBm. The external components for designing a complete 27 MHz FSK receiver include crystals, 455KHz IF filters, and discriminator. A power divider circuit can be applied to connect two FSK receivers with a common RF input port for two-in-one receiver (COMBO) application. Multi-channel communication for each receiver can be achieved by adding crystal selection circuit. The receiver is designed with simple BOM list and comes up with the product in compact design, high reliability and ease in assembly.

Absolute Maximum Rating

Parameters	Rating	Unit
Supply Voltage	4 to 5.5	V
Operating Temperature Storage Temperature	-10 to +65 -40 to +85	℃

Electrical Characteristics

	Specifications			Unit	Condition T=25℃ Vcc=5V
	Min.	Typ.	Max.		
Frequency Range	20	27	35	MHz	
Demodulation		FSK			
Data Rate	0.02	2.4	5	Kbps	
Sensitivity	-85	-90		dBm	50 Ω
Active Current		7	8	mA	
IF Frequency		455		KHz	

Pin Function Descriptions

Ver 2.2 Jul/29/2003

Pin No.	Mnemonic	Function
1	XTA	CRYSTAL CONNECTION PIN
2	F/I	455KHZ IF IN
3	F/O	455KHz IF OUT
4	Q/D	QUAD DETECTION
5	VCC	SUPPLY VOLTAGE PIN
6	D/O	DATA OUTPUT
7	A/O	ANALOG OUTPUT
8	GND	GROUND
9	RFI	ANTENNA INPUT
10	GND	GROUND

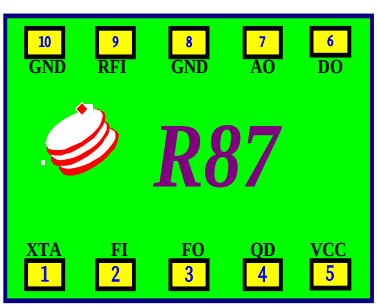

Applications

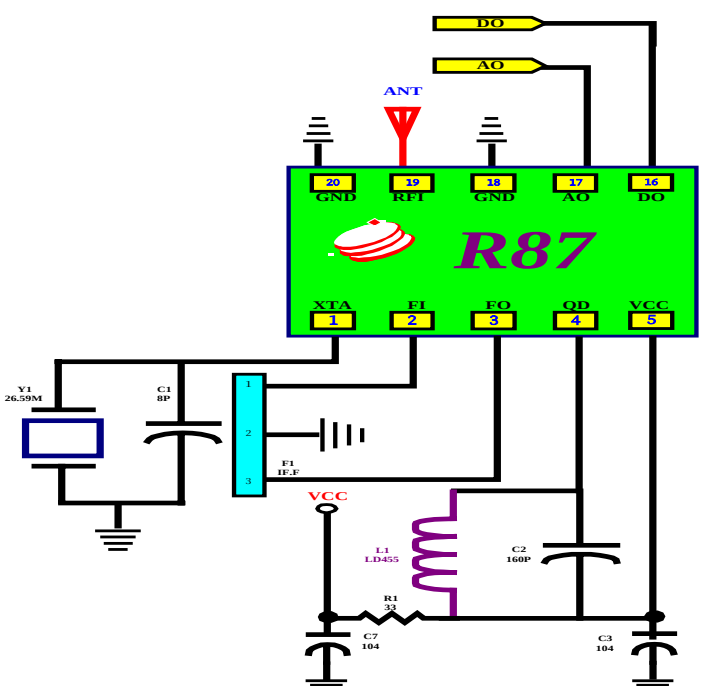

Fig. Application circuit of R87.

External Dimensions

Ver 2.2 Jul/29/2003

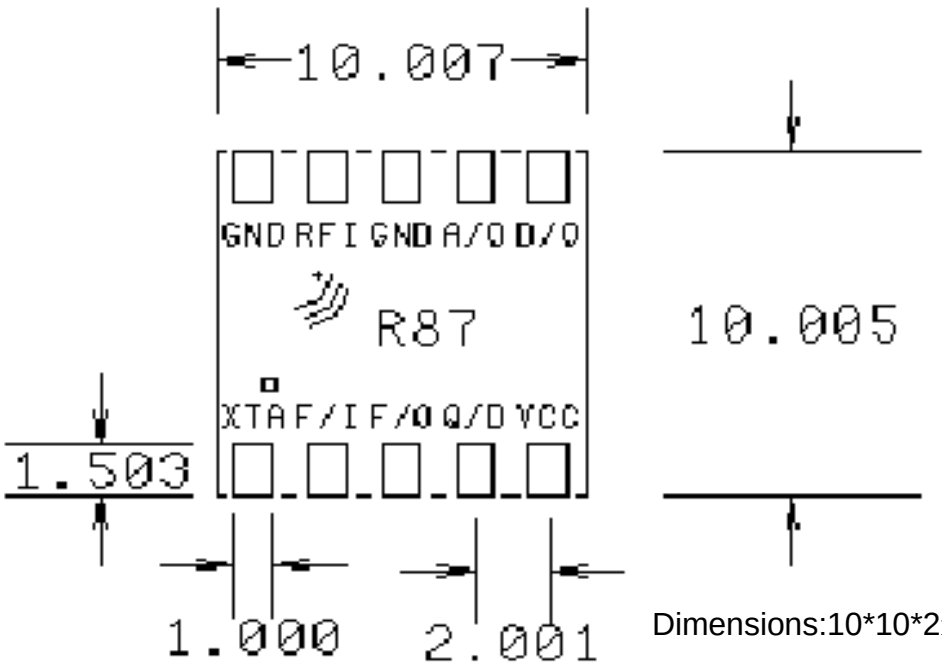

Dimensions:10*10*2mm^3

Recommended Soldering Pattern

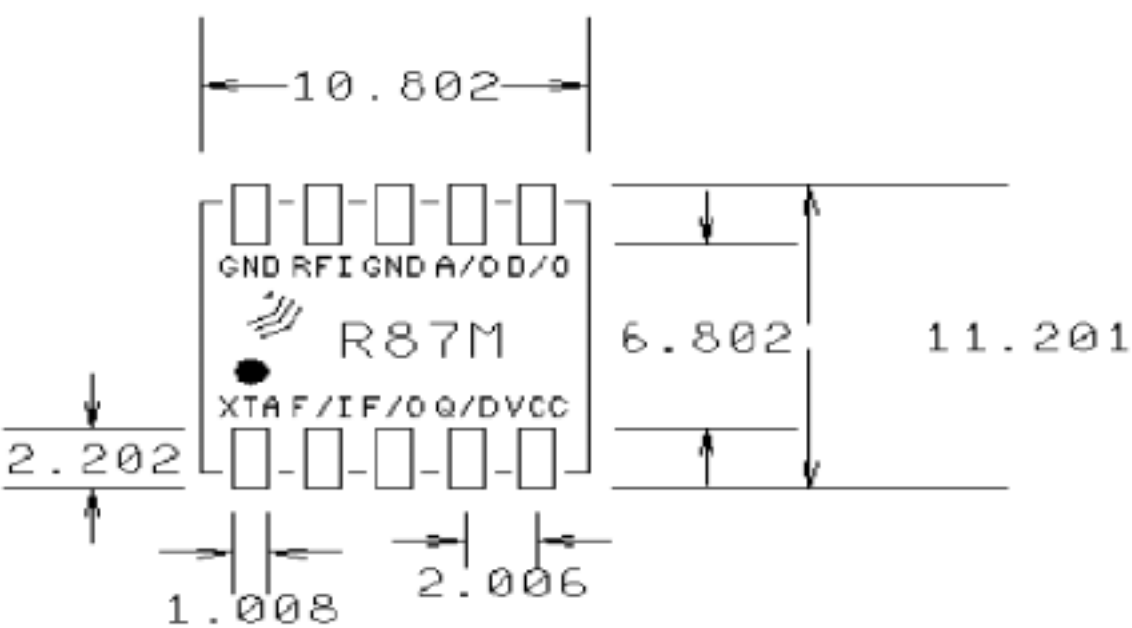

Ver 2.2 Jul/29/2003

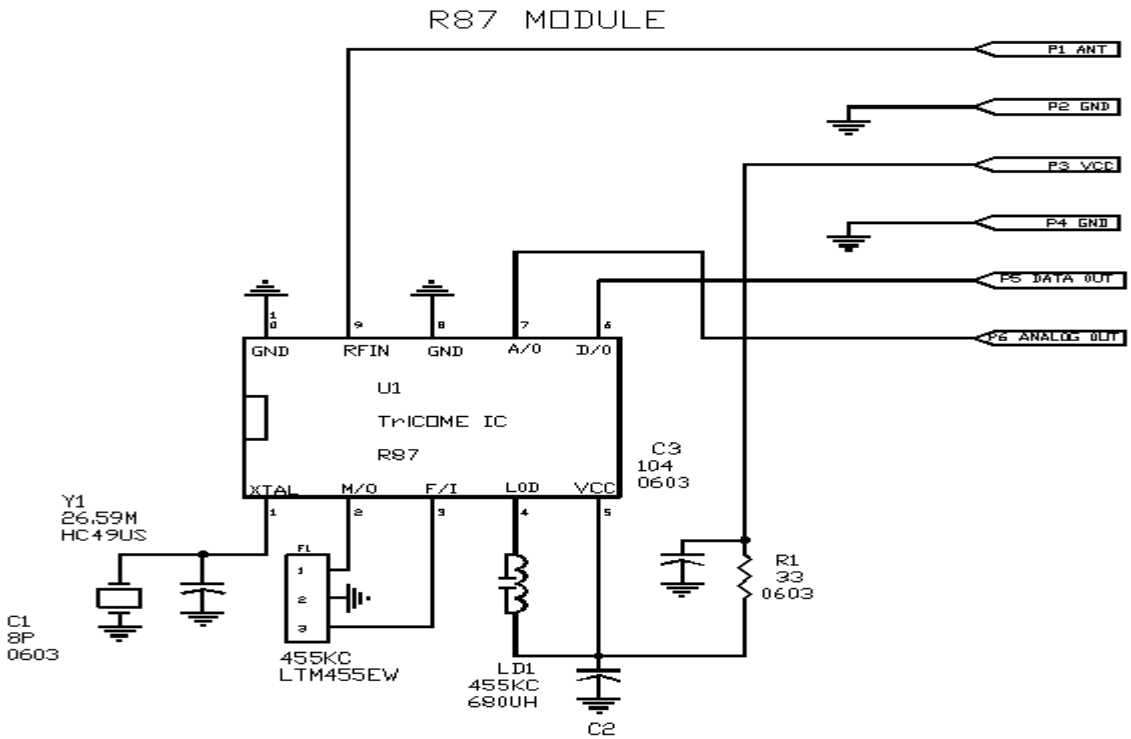

BOM of Application Circuit		
Item	Spec	Designators
1	8p 0603 C0G	C1
2	104 0603 Y5V	C2
3	104 0603 Y5V	C3
4	33 (OHM) 0603 5%	R1
5	LTM455EW	F1
6	680UH	LD1
7	TriCOME R87	U1
8	CRYSTAL 26.59MHz	Y1
9	6PIN 2.54MM	J1
10	PCB 16.5*25*1MM	

1CH Rx module pin assignment

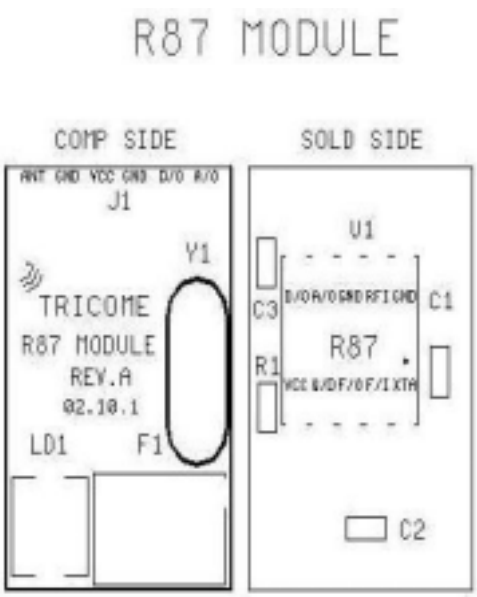

Ver 2.2 Jul/29/2003

Package description

ITEM	W	A_0	B_0	K_0	P	F	E	D	D_1	P_0	P_2	t
DIM	$24^{+0.3}_{-0.1}$	$10.4^{+0.1}_{-0.1}$	$10.4^{+0.1}_{-0.1}$	$2.1^{+0.1}_{-0.1}$	$12.0^{+0.1}_{-0.1}$	$11.5^{+0.1}_{-0.1}$	$1.75^{+0.1}_{-0.1}$	$1.50^{+0.1}_{-0.0}$	$1.50^{+0.25}_{-0.0}$	$4.00^{+0.1}_{-0.1}$	$2.00^{+0.1}_{-0.1}$	$0.3^{+0.05}_{-0.05}$

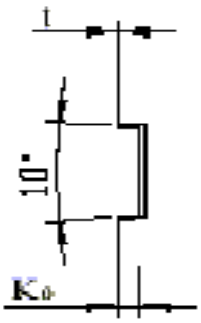

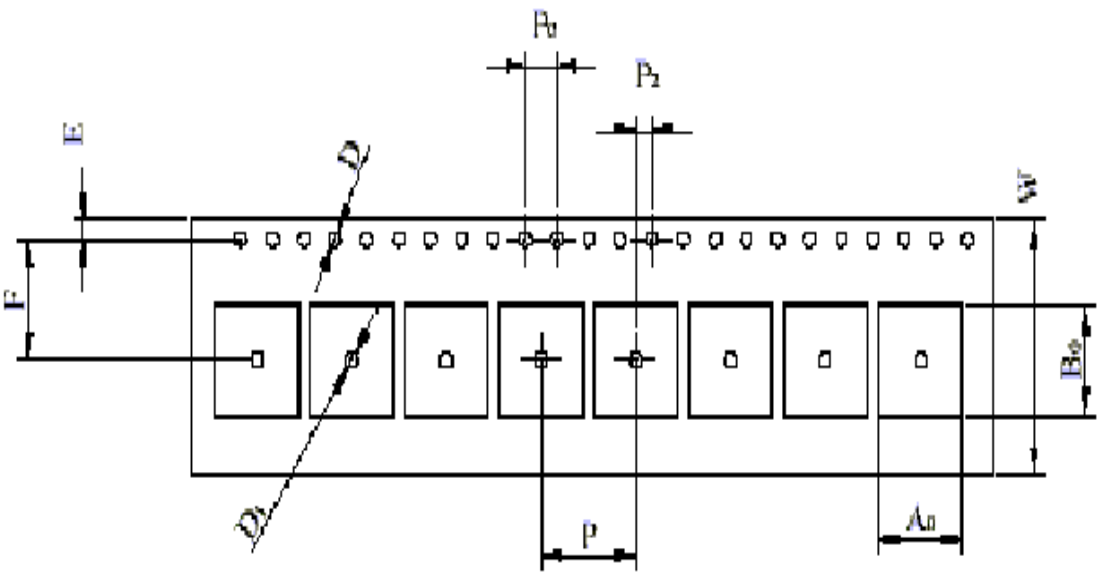

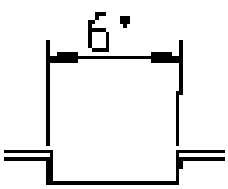

The Picture of Product

< a > Top View

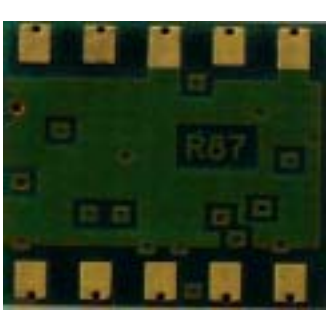

< b > bottom view

Ver 2.2 JUL/29/2003

SUGGESTED OVEN TEMPERATURE PROFILE FOR SMT

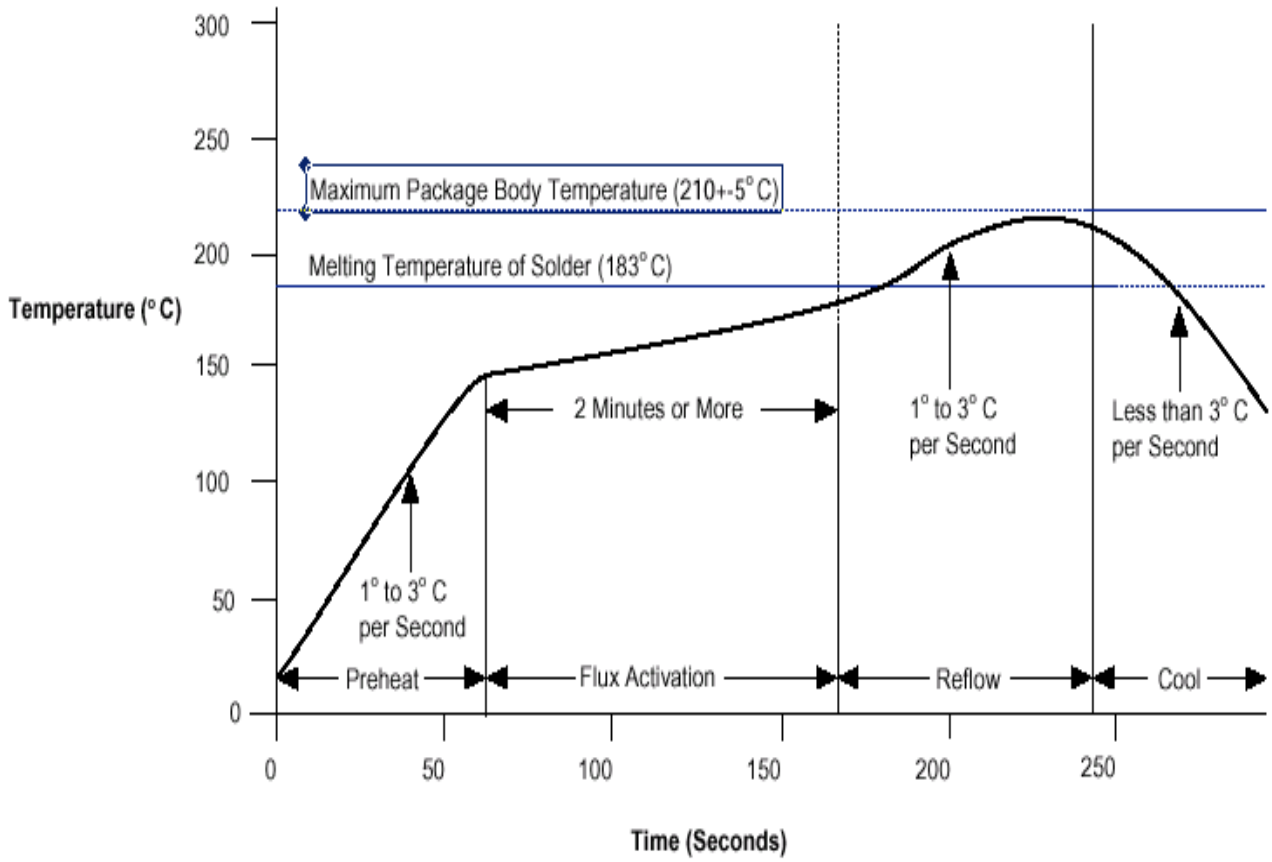

Reflow of Moisture-SensitiveDevices

Once the moisture-sensitive devices are removed from their dry-pack bags or other controlled environments, the devices should be soldered onto a PCB within the floor life specified on the dry pack label. Devices can be stored indefinitely in a desiccant cabinet, a controlled environment kept at less than 30° C and 20% relative humidity. If a device is exposed to too much moisture, bake it for 24hours at 80° C to dry it, then mount the device within the specified floor life.

Performs moisture sensitivity tests according to *Procedures for Characterizing & Handling of Moisture-/Reflow-Sensitive ICs* (IPC-SM-786A