Ver 2.2 Jul/29/2003

LVB FSK TRANSMITTER - T86

Features

Highly integrated
Low Power Consumption
Fast Start-up and Frequency switching

Typical Applications

FSK Transmitter
Cordless Mouse and Keyboard
Wireless Game Pad
27 MHz Wireless Data Transmitters

Product Description

The T86 is a super IC served as a low VHF band (LVB) FSK transmitter. The device is a SMD package with 2.54mm pitch pad and can be easily layout in a low cost single-side PCB. This super IC can be used for FSK applications of 27 MHz band worldwide. T86 is suitable for 2.2 to 3.5V. The device is self-contained, requiring just an external crystal and antenna matching circuit to operate. The transmitter with simple BOM list for application circuit comes up with compact design, high reliability and ease in assembly.

Absolute Maximum Rating

Parameters	Rating	Unit
Supply Voltage	2.2 to 3.5	V
Operating Temperature Storage Temperature	-10 to +65 -40 to +85	℃

Electrical Characteristics

	Specifications			Unit	Condition T=25℃ Vcc=2.5V
	Min.	Typ.	Max.		
Frequency Range	26	27	28	MHz	
Modulation		FSK			
Data Rate	0.02	2.4	5	Kbps	
Output Power	4	5		dBm	50 Ohms
Deviation	±4	±5	±6	KHz	
Power Supply Voltage	2.2	2.5	3.5	V	
Active Current	6.5	7	8	mA	Vcc=2.5V
Standby Current			0.1	uA	

Ver 2.2 Jul/29/2003

Pin Function Descriptions

Pin No.	Mnemonic	Function
1	QX1	Crystal connection pin
2,3	GND	Ground
4	ANT	RF output port
5	VCC	Supply voltage pin
6	GND	Ground
7	DIN	Data input port
8	QX2	Crystal connection pin

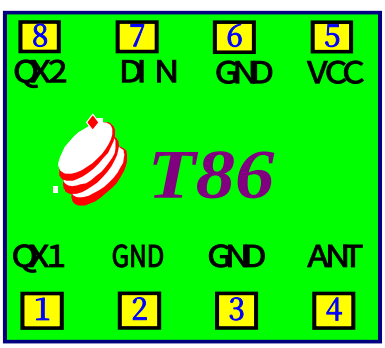

Typical Performance Waveforms

The excellent performance of settling time, with regards to the oscillator start up and modulator frequency switching, is a feature of T86. It is an important parameter in developing the air interface and low power consumption devices. A test setup, which is not rigorous but realistic and helpful in design, uses TriCOME's transmitter and receiver to measure the start up and settling time of the T86 is depicted in Fig. 1. Two small loop antennas are used for the transmitter and receiver respectively, which is the typical applications for most wireless mouse. The distance between transmitter and receiver is 50 cm. Fig. 2 shows the start up time of the oscillator. A 10Hz square wave is added in the EN pin, the measurement result shows that the start up time is less than 1.2 ms.

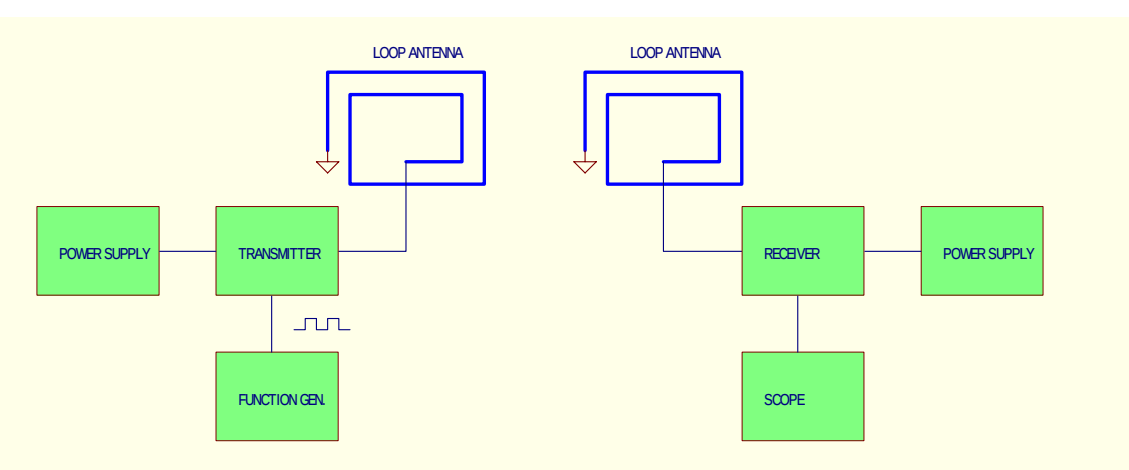

Fig. 1 Test set-up

Ver 2.2 Jul/29/2003

Fig. 2 Start-up waveform, yellow trace is the input of the EN signal; green trace is the demodulation signal of receiver.

Fig.3 shows the spectrum of the FSK signal, the modulation signal for DIN pin is 1.4 KHz square wave. The High/Low input signal of DIN pin is used to change the frequency of the T86.

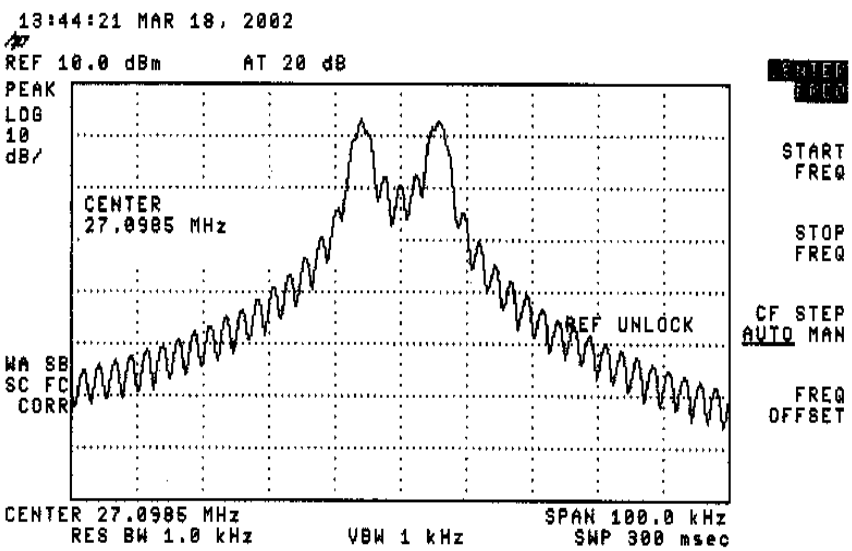

Fig.3 FSK signal spectrum of T86

Fig. 4 shows the characteristic of the frequency switching in time domain. The measurement results show that the demodulation signal is delayed about 125 us due to the whole data link path. There is a transition time when frequency is changed. The transition time is less than 10 us, but it will be affected by the environment and distance.

< a > < b >

Fig. 4 Frequency switching waveforms, yellow trace is the input of the DIN signal; green trace is the demodulation of the receiver. (a). DIN signal from low to high, (b). DIN signal from high to low

Ver 2.2 Jul/29/2003

Applications

Fig. 5 depicts the application circuit of T86.The crystal, coupling capacitor C1, and T86 should be kept close together in layout to sustain the frequency stability. A 10 k ohm resistor R1 is used between EN port and QX1 pin to provide the bias of the oscillator. When applied EN port voltage goes HIGH, the oscillator will start oscillation. When applied EN port voltage goes LOW, the T86 will be in the sleep mode. Capacitor C1 serves to adjust transmission frequency at the specified center frequency of crystal Y1. When frequency is high, increase capacitance. While frequency is low, decrease capacitance.

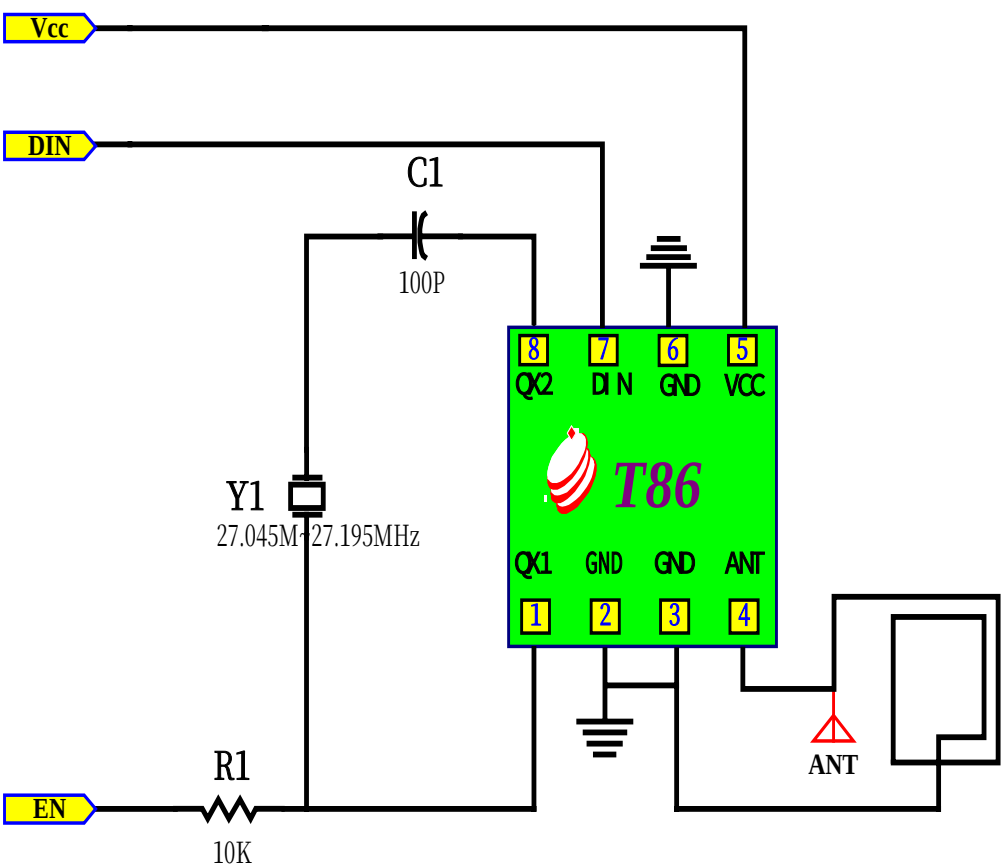

Fig. 5 Application circuit of T86

External Dimensions

Ver 2.2 Jul/29/2003

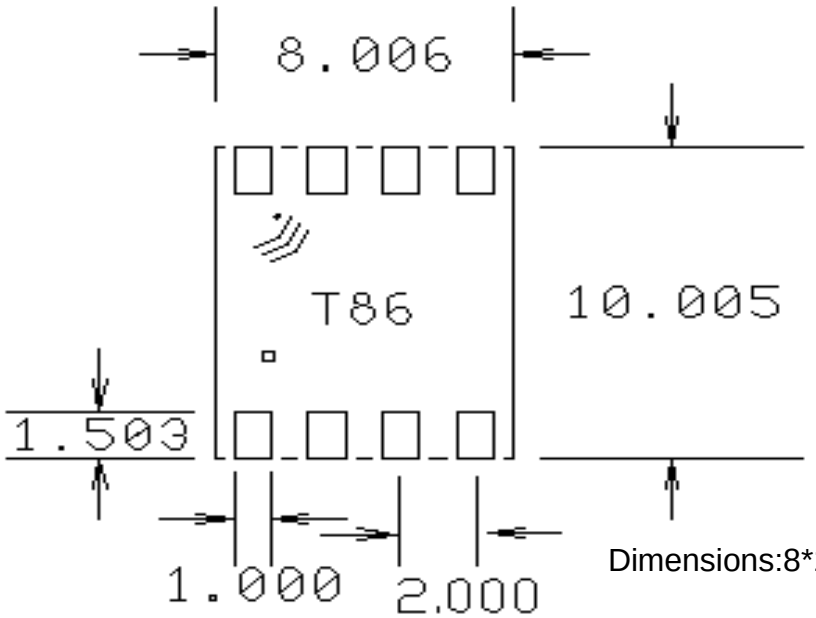

Dimensions:8*10*2 mm^3

Recommended Soldering Pattern

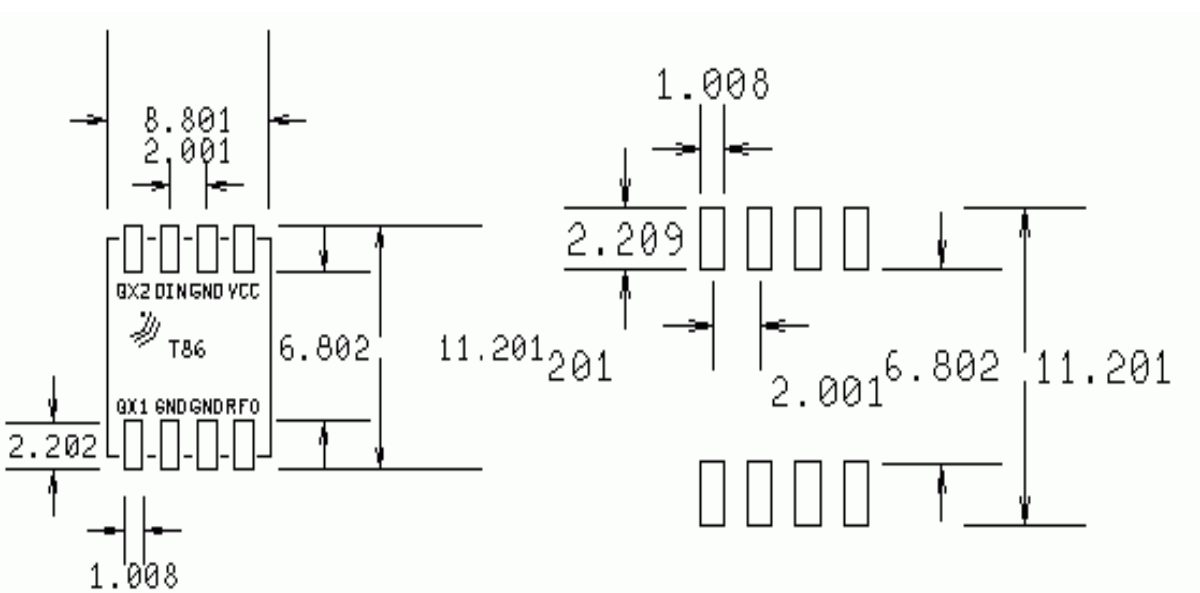

Ver 2.2 Jul/29/2003

Application Circuit

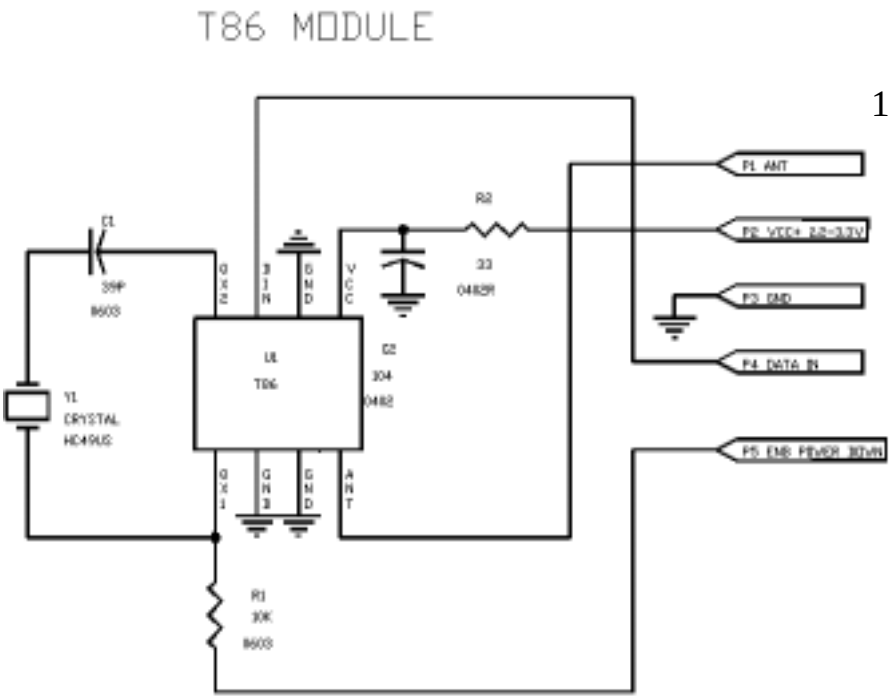

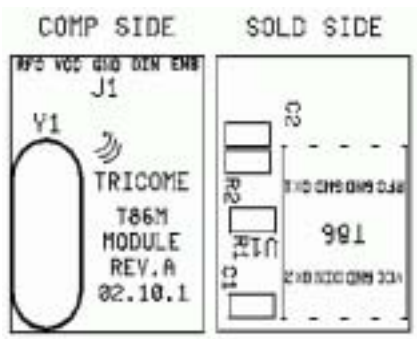

Item	Spec	Designators
1	39p 0603 C0G	C1
2	104 0603 Y5V	C2
3	10K(OHM) 0603 5%	R1
4	0 (OHM) 0603 5%	3V R2
5	TriCOME T86	U1
6	X'TAL 27.045MHz	Y1
7	5PIN 2.54MM	J1
8	PCB 12.5*16*1MM	

Option Items for Application Circuit

1	33 (OHM) 0603 5%	5V R2
2	X'TAL 27.195MHz	Y1
3	X'TAL 27.145MHz	Y1
4	X'TAL 27.095MHz	Y1

Note For Option Items

1.33 (OHM) is for 5V application

2.Item 2 to 4 are optional, which **is up to customer's requirement**

Ver 2.2 Jul/29/2003

Package description

ITEM	W	A_0	B_0	K_0	P	F	E	D	D_1	P_0	P_2	t
DIM	$24^{+0.3}_{-0.1}$	$10.4^{+0.1}_{-0.1}$	$10.4^{+0.1}_{-0.1}$	$2.1^{+0.1}_{-0.1}$	$12.0^{+0.1}_{-0.1}$	$11.5^{+0.1}_{-0.1}$	$1.75^{+0.1}_{-0.1}$	$1.50^{+0.1}_{-0.0}$	$1.50^{+0.25}_{-0.0}$	$4.00^{+0.1}_{-0.1}$	$2.00^{+0.1}_{-0.1}$	$0.3^{+0.05}_{-0.05}$

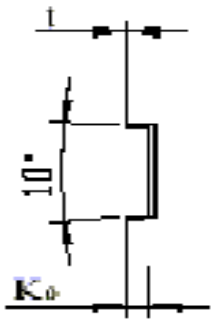

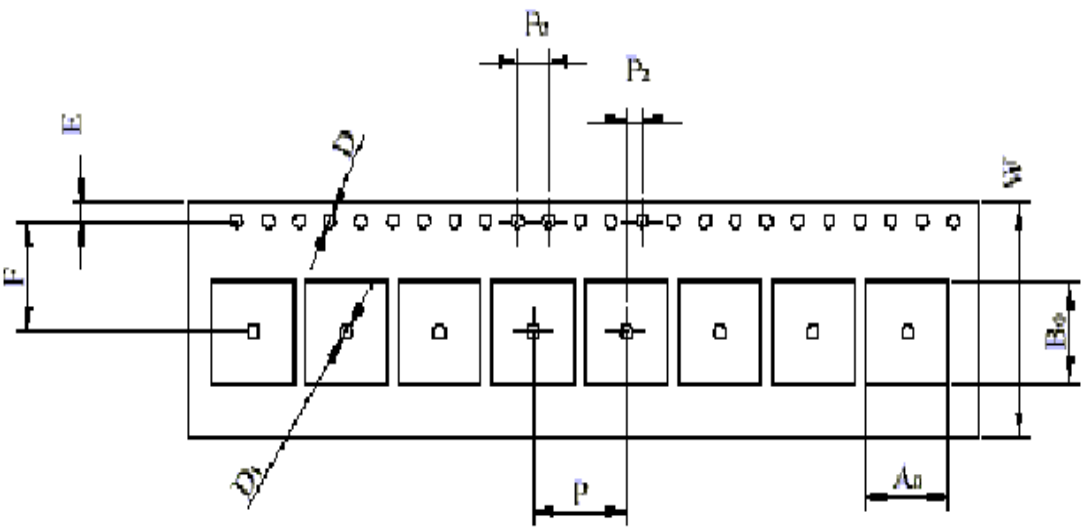

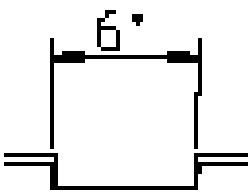

The Picture of Product

< a > Top View

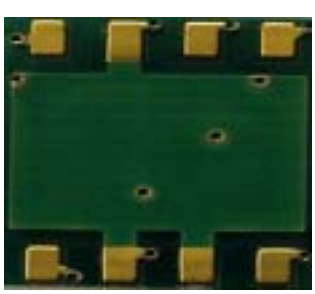

< b > bottom view

Ver 2.2 Jul/29/2003

SUGGESTED OVEN TEMPERATURE PROFILE FOR SMT

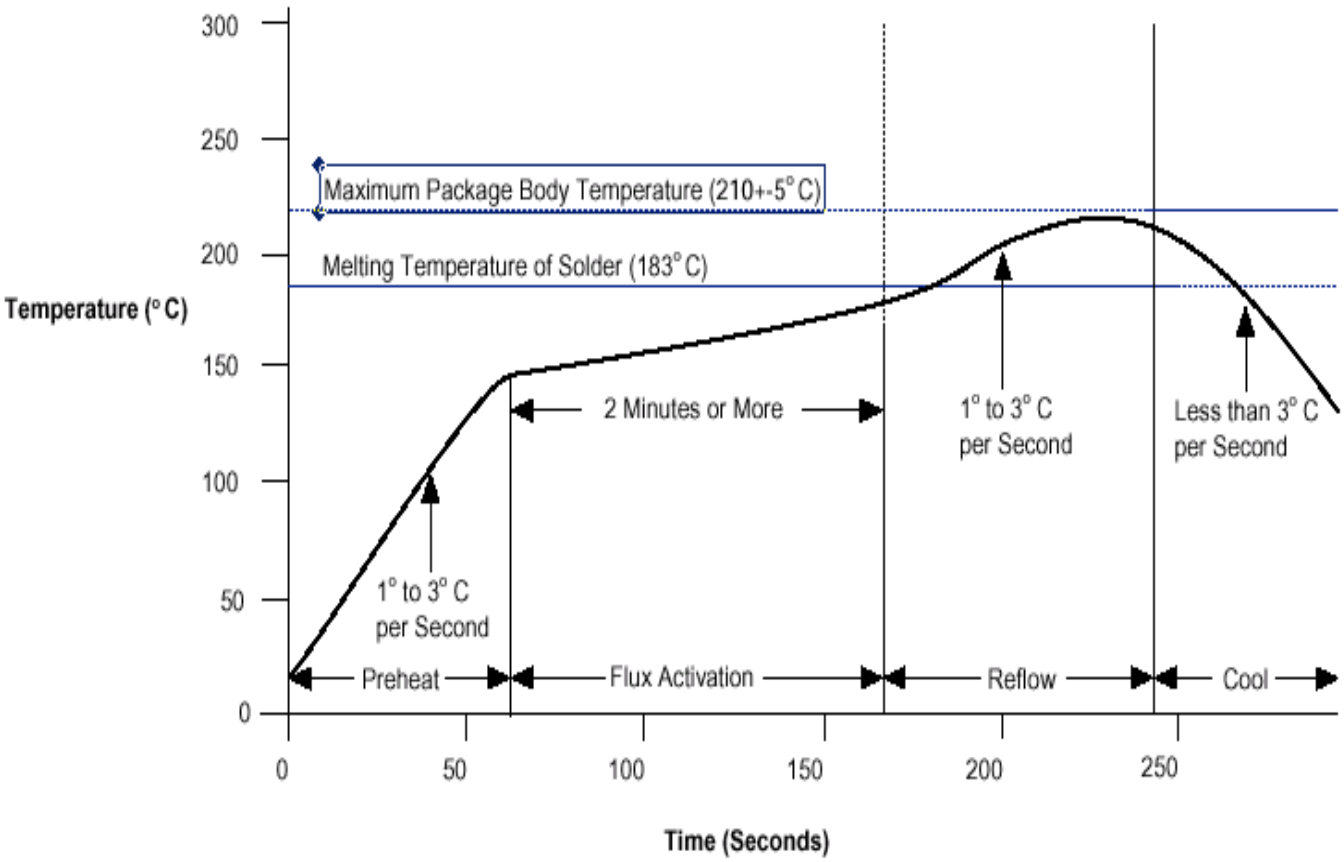

Reflow of Moisture-SensitiveDevices

Once the moisture-sensitive devices are removed from their dry-pack bags or other controlled environments, the devices should be soldered onto a PCB within the floor life specified on the dry pack label. Devices can be stored indefinitely in a desiccant cabinet, a controlled environment kept at less than 30° C and 20% relative humidity. If a device is exposed to too much moisture, bake it for 24hours at 80° C to dry it, then mount the device within the specified floor life.

Performs moisture sensitivity tests according to *Procedures for Characterizing & Handling of Moisture-/Reflow-Sensitive ICs* (IPC-SM-786A)